DWG NO	SHEET	REV
5210E032		A

NEXT ASSEMBLY

REVISION HISTORY					
REV	DESCRIPTION	ECN	DATE	BY	APPROVED
A	CHANGE FONT FOR MANUAL	5537	2/29/2008	LIP	

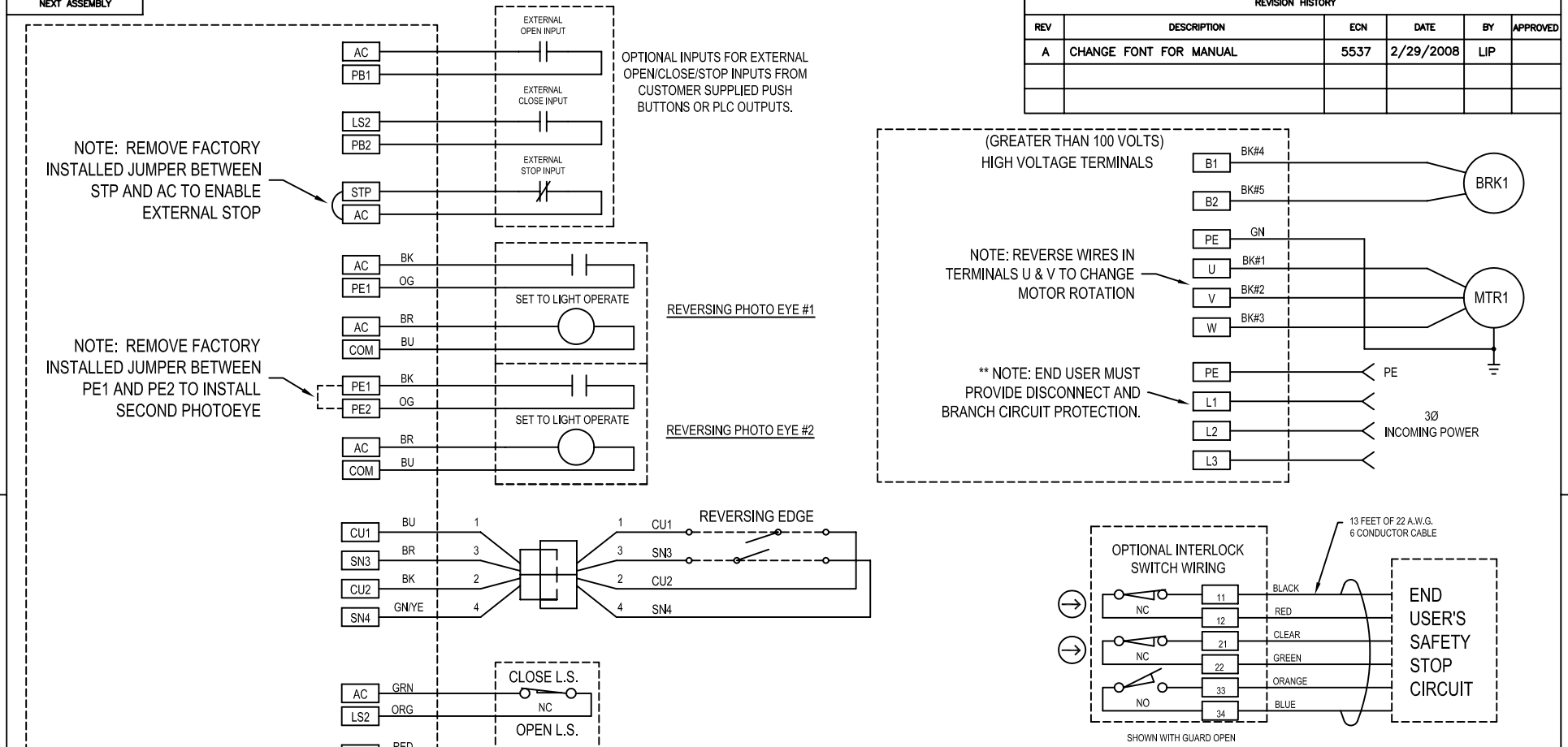

ITEM	QTY	PART NO.	DESCRIPTION

PARTS LIST / MATERIAL

INCH TOLERANCES		
OVER	UP TO	+ / −
0	0.125	0.005
0.125	0.25	0.010
0.25	1.25	0.020
1.25	5	0.030
5	15	0.040
15	40	0.060
40	80	0.100
80	–	0.125
ANGLES	+/− 1 DEG	
FINISH		

DO NOT SCALE DRAWING

MM–DD–YY

DRAWN BY LIP DATE 10/18/2007

CHECKED BY DATE

APPROVED BY DATE

INITIAL ECN 5537

DATE ISSUED 11/2/2007

REF

RITE–HITE® DOORS INC.

TITLE
MACHINE GUARDING
FIELD WIRING DIAGRAM

SIZE	MODEL NUMBER	DWG NO	REV
B	1340/50/60	5210E032	A
SCALE 8"=1'	PART # 1746.x	SHEET	

©2007 RITE–HITE® DOORS INC.