DWG NO	SHEET	REV
5210E026		C

NEXT ASSEMBLY

REVISION HISTORY					
REV	DESCRIPTION	ECN	DATE	BY	APPROVED
A	MISC CHANGES	4901	11/11/2005	RJK	
B	575V = 250VDC, was 205VDC	4901	5/16/2006	MDB	
C	ADD 400V 50/60 HZ OPTION	5420	6/28/2007	DAS	

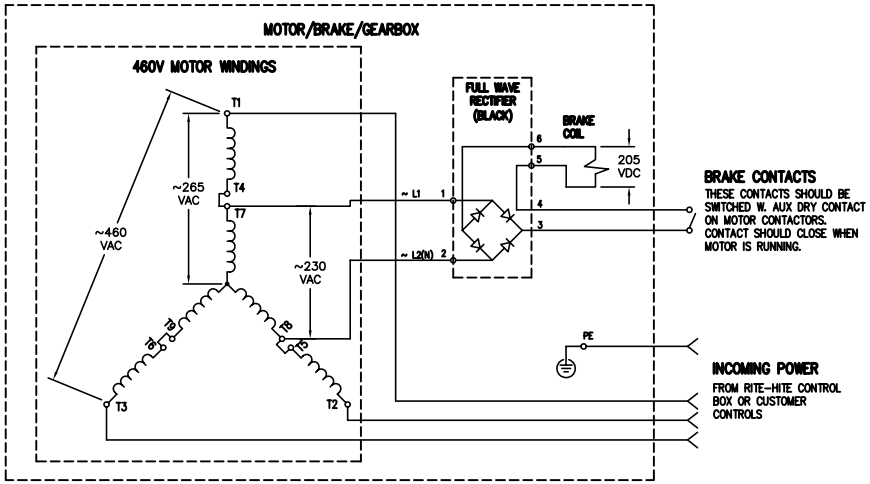

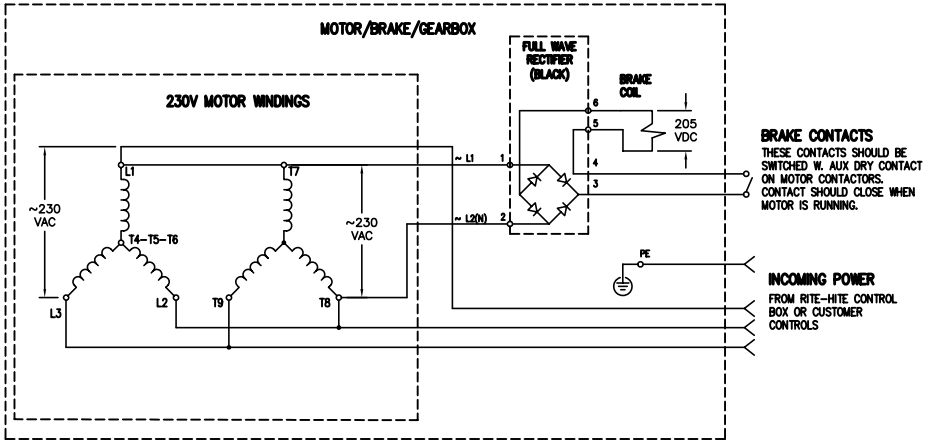

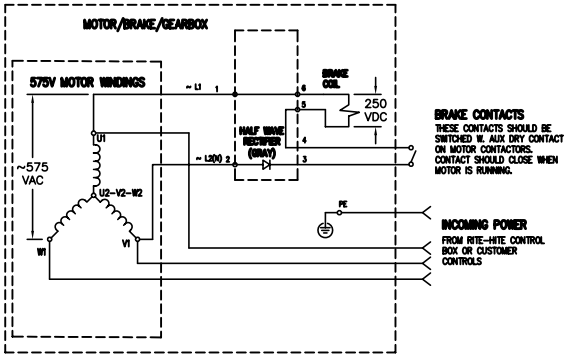

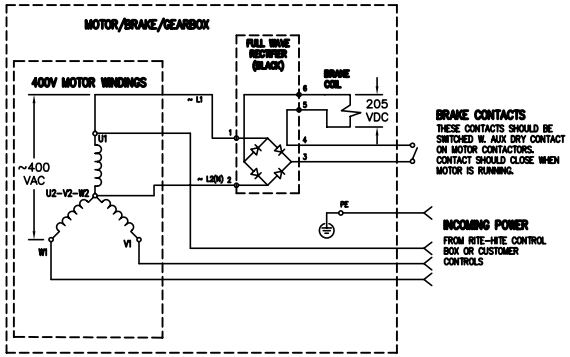

ITEM	QTY	PART NO.	DESCRIPTION

PARTS LIST / MATERIAL

INCH TOLERANCES		
OVER	UP TO	+ / −
0	0.125	0.005
0.125	0.25	0.010
0.25	1.25	0.020
1.25	5	0.030
5	15	0.040
15	40	0.060
40	80	0.100
80	–	0.125
ANGLES	+/- 1 DEG	
FINISH		

DO NOT SCALE DRAWING

		MM-DD-YY	
DRAWN BY	AJW	DATE	8/4/2003
CHECKED BY		DATE	
APPROVED BY		DATE	
INITIAL ECN	4225		
DATE ISSUED	8/15/2003		
REF			

RITE-HITE® DOORS INC.

TITLE

MOTOR/BRAKE SCHEMATIC

SIZE	MODEL NUMBER	DWG NO	REV
B	1340/50/60	5210E026	C
SCALE 6"=1'	PART #		SHEET

©2003 RITE-HITE® DOORS INC.